Precipitator HV Supplies
General Info

For a few years, eBay has had a number of listings for **"High Voltage Electrostatic Precipitator Power Supplies"** made in China. A few of these are encased in plastic boxes but most are open boards.

The common listings are for four basic models, as:

15 KV	150 W
30 KV	300 W
40 KV	400 W
60 KV	600 W

On the fusor.net forum there has been some discussion about – could one of these be used to power a fusor? Recently, one member succeeded in making neutrons in a small diameter fusor chamber, using one of these 30 KV 300 W supplies. So, that is encouraging. However, on the discouraging side, it seems several people who have tried to use them have had them fail, for unknown reasons, in a short period of time.

My Efforts

Mostly out of curiosity, I thought I would get two of these – 30 KV and 60 KV – and see what I could figure out about what they are. The seller I bought from was "cnc-mall". The 30 KV was $49 and the 60 KV was $136.

Both of these are designed for input power of only 220 VAC, so not ideal for US users. I haven't actually powered up either of the supplies I have, partially because I am waiting for proper power plugs to arrive.

I think I have traced out the circuits for both of these supply boards. In this General section, I will share what I have learned that is mostly in common between the two. In two other sections I will provide details for the 30 KV and 60 KV versions.

Versions

The HV on all these supplies is generated in a ferrite-core transformer. Each makes DC HV output so has a diode inside the secondary section to convert AC to DC. Each of these transformers can make 15 KV. The 30 KV supply uses two transformers with the secondaries connected in series (15 + 15 = 30). The 60 KV supply uses 4 transformers in series. All the supplies with multiple transformers seem to have their primaries connected in parallel.

The 40 KV supply appears (I haven't seen one in hand) to use two slightly larger transformers, so these must make 20 KV each.

I was looking for pictures I could capture of the two supplies I purchased. I soon realized that even from the eBay listings of the seller I purchased from, the supplies in the pictures had different board configurations from the ones I received. Having traced out the circuits, I hope most people are now getting ones like I have. If not, I hope they share many commonalities to make my efforts helpful.

I think all of the supplies have in common, two MOSFET switching transistors, mounted on a largish heat sink. These transistors switch a DC drive across the transformer primaries.

Here is a picture I found from a different seller that looks pretty close to my **60 KV** supply.

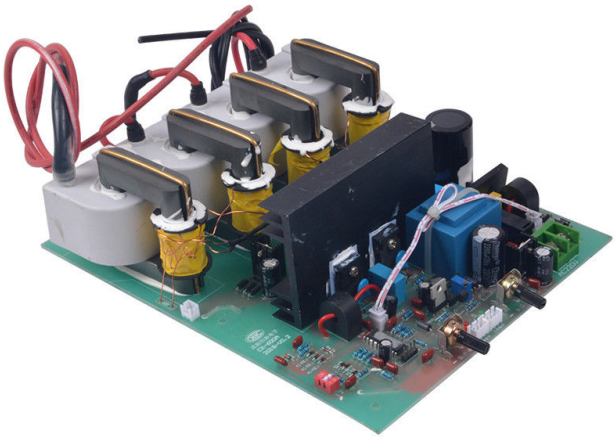

It is still a bit different as the two pot shafts are parallel to the board, where in the one I have they are perpendicular. The key similarities are the component layouts and the presence of the largish blue square which is a low voltage transformer. Many pics on ebay look very different and don't have that transformer.

I looked at many listings for a pic of a **30 KV** supply like the one I have and didn't find any that had the same component layout. Here is a picture I took of the one I have.

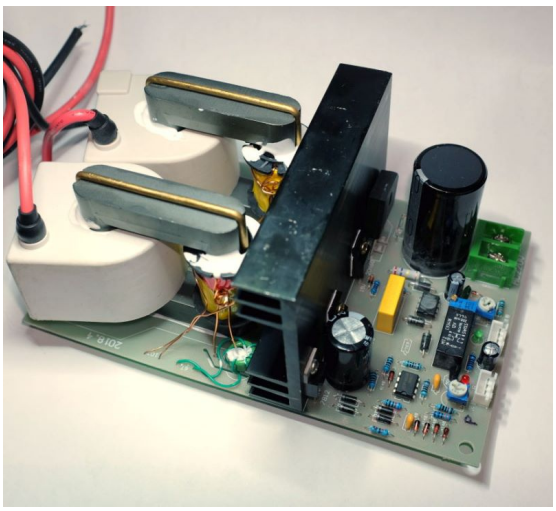

I hope this one is like supplies that others may receive.

I expect any different layouts will share many common design aspects with what I have learned, but I wanted to warn that, based on pictures, there have been several different versions of these supplies.

Unmarked Chips

Both the 30 KV and 60 KV supplies have an 8-pin DIP packaged chip that has its markings ground off. I think I have worked out what this is and it is the same chip on both supplies. The circuits are a little different but basically the same function, to switch the two transistors. More details later.

On the 60 KV supply there is another chip with markings ground off. It is a 16-pin DIP and from it's circuit connections I am pretty sure it is a microcontroller. Unfortunately, I have not found any chip that seems to match the pin-outs and configurable pin functions.

Switching Configuration

Both of the supplies have basically the same switching circuit which is a half bridge topology. Here is a simplified diagram that shows the basic circuit.

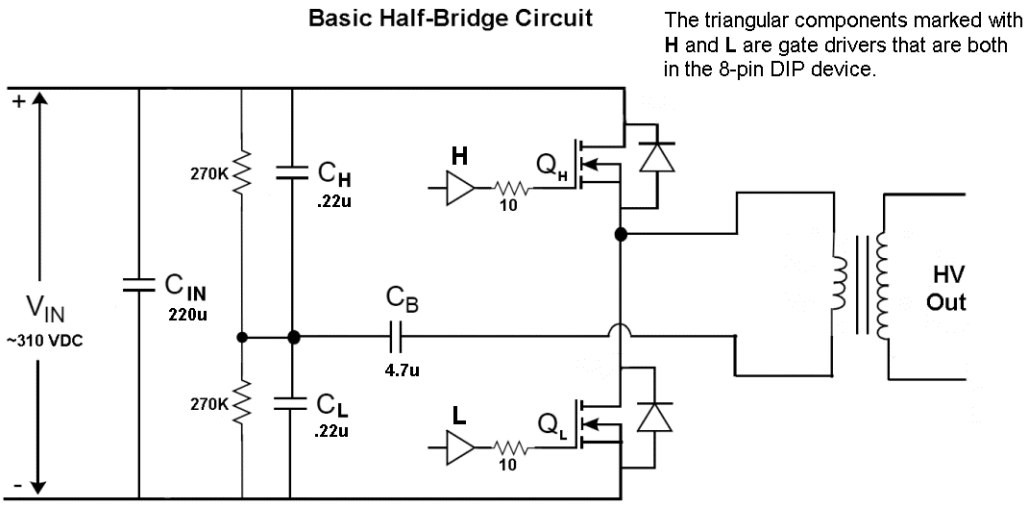

Not shown here, but the 220 VAC passes through a full-wave diode bridge and is converted to DC. The peak voltage is 1.414 * 220 so the DC is about 310 volts as shown at the left of the diagram. The negative rail at the bottom is the ground reference for the rest of the supply's circuits. The capacitors C_H and C_L make a virtual ground half way between the full 310 VDC for switching. The two transistors Q_H and Q_L are alternately switched into conduction. So when Q_H conducts +310 V is applied to the top of the transformer primary and when Q_L conducts -310 V is applied to the same point. The other end of the primary goes to the virtual ground, half way between, so 155 V is switched through the primary, first one direction, then the reverse. The series capacitor C_B keeps the transformer from creeping into saturation from slight imbalances between the two driving sides.

The H and L triangle symbols are gate drivers to switch the two FET transistors on and off. They are both inside the unmarked 8-pin chip. At first I thought it was just a driver, but looking at the circuits I couldn't see any oscillator driving it. Eventually I realized there was a chip in the correct package and pin functions that has floating gate driver outputs but also has the equivalent of a 555 for the oscillator feeding the gate driver inputs.

So I'm pretty sure the 8-pin chip is one of these:

IR2153, IR21531, IRS2153, IRS21531

They all seem to have very little differences in the data sheets that I can see. The last two seem to be recommended for current designs.

There is a slight chance it could be an IRS27951 which is similar, but I lean to it being one of the others.

Switching circuit

The following is a typical connection circuit from one of the data sheets. It seems to match very well to the circuits I find in the 30 and 60 KV supplies. In the bottom-right, the coil connection is different. Our circuit connects it to the virtual ground, where this example has it going to the negative rail. But this is a trivial difference that doesn't change the matching of the rest.

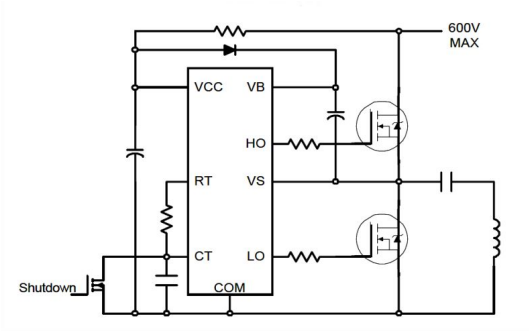

Like a 555 chip, the value of the resistor connected between RT and CT and the value of the capacitor CT to ground, determine the frequency of the internal oscillator and hence the switching rate.

In both supply circuits the C is 1 nf. In both supplies the R is controlled by the user adjustable Voltage setting pot. In fact it is the V pot in series with a trimmer pot. The screw setting of the trimmer determines a minimum R if the V pot is turned all the way down to zero.

The total R value increases as the V pot turns clockwise. In the 555-type circuit, increasing R makes the oscillating frequency go lower. So setting to a higher voltage on the supply means running at a lower switching frequency.

I don’t fully understand how the switching frequency adjusts the output HV. There is no real PWM in this simple chip but there is a bit in one way. The chip has a fixed dead-time if I read the data sheets right. About 1.2 uS I think. So dead-time is off time for a half-cycle period. As the frequency goes up, the half cycle time goes down, so the percentage of dead-time to half-cycle time goes up (percentage of On goes down).

I don’t know if this is the full explanation of how lower frequency makes higher voltage out, but it does seem to work in the right direction.

The 30 KV circuit is just about like the circuit above. In the 60 KV circuit there is a bit more happening, but we’ll leave that for the section particular to that supply.

Shutdown

As shown in the example diagram, applying ground voltage to the CT pin causes Shutdown. This stops the oscillator in a clean way. Both supplies have a way to shutdown. Part of the circuit uses a current sensing coil on one of the transformer primary wires to monitor current. A circuit converts the average current to a voltage level. In the 30 KV supply a 358 dual op-amp chip compares this current signal to the setting of the “Protect” pot. If a threshold is crossed a shutdown is sent to the oscillator. In the 60 KV supply there is no 358 but a microcontroller in the middle, that I think performs a similar shutdown function.

HV Diodes

As mentioned earlier, each of the HV transformers can make up to about 15 KV. Although the transformer is coupling AC at many kHz, the output of each one is DC, presumably because there are diodes inside the secondary plastic shell.

That’s all that is really needed to know to understand operation. But I got curious.

Most HV diodes are really multiple diodes in series in a package and hence have pretty high forward voltage drops. Maybe 10’s of volts are lost before any current flows through the diode.

I thought of a way to approximately measure this.

I didn’t want to cut the daisy-chained apart, but on the 30 KV supply there are only two in series. I have an adjustable DC supply that goes up to about 100 V. I connect the supply in series with a mA meter and then across the red and black output wire from the supply. This makes the following test setup.

Measuring Forward Voltage Drop
of Diodes in HV Transformer Secondaries

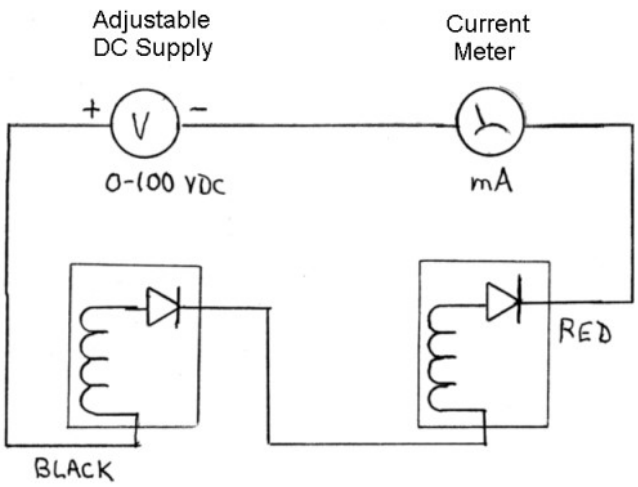

I (mA)	V (volts)
1	54
10	80

So for each secondary section diode
Vf = approx 27 to 40 V

To forward bias the diodes in the secondaries the positive output of the test supply needed to be connected to the black HV supply wire, and the red to negative coming through the mA meter. I slowly turned up the voltage from zero, watching for any current flow through the meter. When I saw current, I carefully adjust up until I had 1 mA flowing and then recorded the voltage. I continued up to 10 mA current and recorded that voltage.

As shown in the diagram, 1 mA was at 54 volts. Since there are diodes in each transformer and we've measured tow in series, the forward drop for one transformer should be about half measured or about 27 V. At 10 mA more voltage was dropped as shown in the diagram results.

I was also curious how the diodes were arranged in the secondary plastic blob. The 60 KV supply I ordered arrived here broken. The HV output red wire was broken off right at the secondary plastic of the end transformer. The seller agreed to send me a replacement and didn't ask for me to return the bad one.

I can't see any way to fix the connection in a dependable way, so I decided to sacrifice that transformer to curiosity. I cut the wire to the next transformer, unsoldered the primary wires for the bad one and started working on removing the transformer from the board. With the mounting bracket out it was still glued to the board and a pain to get loose, but I did. The splitting the ferrite core was hard to because of more glue. Eventually I got the secondary out in my hand.

The epoxy(?) was hard. Several hours of careful Dremeling and scraping eventually got the diodes exposed...

Not just one. There are 4 diodes in a full-wave bridge configuration.

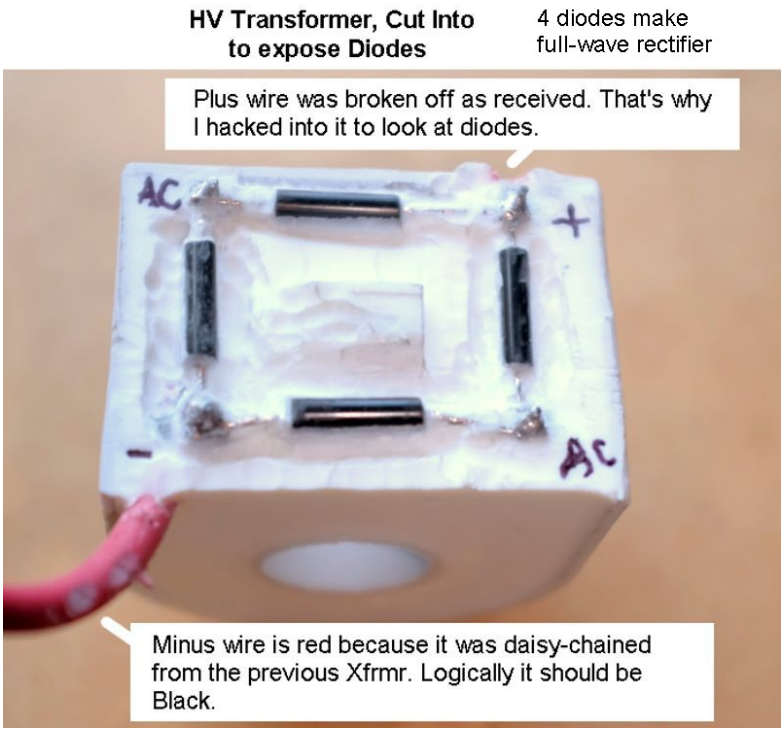

And not that it really matters much, but since I could now get to the coil pins (labeled AC in the pic), I measured the coil resistance: about 555 ohms.